WATER PIPE IDENTIFICATION (119-1)

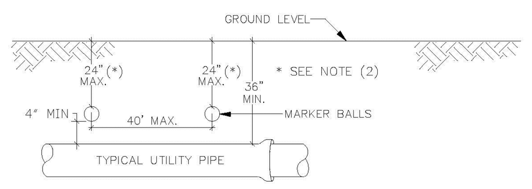

GENERAL NOTES:

1. ALL UTILITY PIPE SHALL BE INSTALLED WITH 4"ø MARKING BALLS PLACED EVERY 40' AND AT EVERY FITTING, FOR IDENTIFICATION AND WARNING PURPOSES, BURIED ABOVE THE PIPE AT A MAXIMUM DEPTH OF 24 INCHES OR AS APPROVED BY THE OWNER. IT SHALL BE COLOR CODED AND WORDED AS FOLLOWS:

   POTABLE WATER.
   A. COLOR: BLUE PER 62-555.320(21)(b)(3) F.A.C.
   B. LETTERING: WATER
   C. FREQUENCY OF MARKER BALLS SHALL BE 145.7 Khz.
   D. THE MARKER BALLS CAN BE BURIED IN ANY ORIENTATION.

   THE MARKER BALLS SHALL BE DETECTABLE BY STANDARD METAL DETECTION EQUIPMENT AND SHALL BE MANUFACTURED BY TEMPO OR 3M LOCATOR SYSTEM OR EQUIVALENT (FREQUENCY 145.7 Khz)

2. FOR LARGE DIAMETER PIPE INSTALLED AT DEPTHS BELOW 4'-0" MARKER BALLS SHALL BE PLACED AT A MAXIMUM DEPTH OF 4'-0" BELOW GRADE *.

WATER PIPE IDENTIFICATION

ENGINEERING STANDARDS 2022

REVISIONS				
BY	DATE	ENGINEERING DIVISION CITY OF POMPANO BEACH	WATER PIPE IDENTIFICATION	
S.S.	01/12			DATE: JAN. 2022
S.S.	06/16	SCALE: N.T.S.		DWG. NO. 119-1

UTILITY PIPE AND MARKER BALLS LOCATION (120-1)

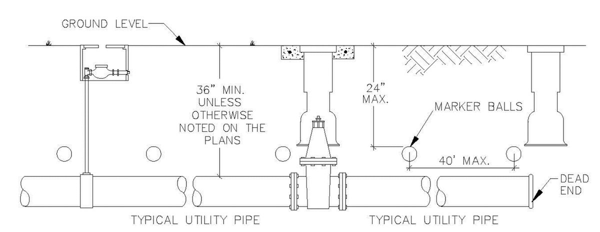

GENERAL NOTES:

1. ALL NONMETALLIC PIPE SHALL BE INSTALLED WITH 12 THHN SOLID COPPER TRACING WIRE.
2. THE MARKER BALLS MUST BE INSTALLED DIRECTLY ABOVE THE PIPE.
3. MARKER BALLS SHALL BE INSTALLED AT 40' O.C.
4. BALL COLOR CODING:
   POTABLE WATER SYSTEM: BLUE PER 62-555.320(21)(b)(3) F.A.C.

UTILITY PIPE AND MARKER BALLS LOCATION

ENGINEERING STANDARDS 2022

REVISIONS				
BY	DATE	ENGINEERING DIVISION CITY OF POMPANO BEACH	UTILITY PIPE AND MARKER BALLS LOCATION	
S.S.	01/12			DATE: JAN. 2022
S.S.	06/16	SCALE: N.T.S.		DWG. NO. 120-1

AUTOMATIC AIR & VACUUM VALVE FOR POTABLE WATER (123-1)

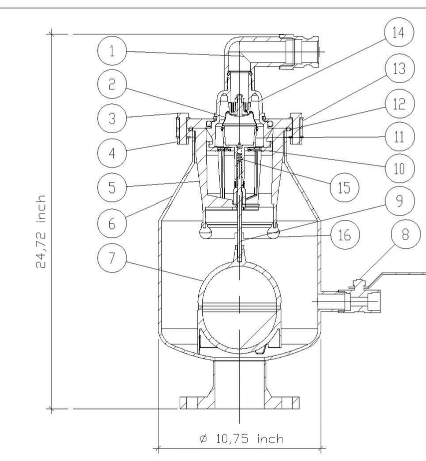

AUTOMATIC AIR & VACUUM VALVE FOR POTABLE WATER

Model 986
Automatic Air and Vacuum Release Valve, steel - epoxy powder coated for operating range: 0-250 PSI (17.2 Bar)

Type	Size ANSI	Maximum Pressure PSI/Bar	Body Material	Overall Width B Inch/mm	Overall Height H Inch/mm	Weight Lbs./Kg
Thread	2" FNPT	250 PSI 17.2 Bar	Steel	10.75" 270 mm	23.2" 600 mm	50.7 lbs 23.0 Kg

ENGINEERING STANDARDS 2022

REVISIONS				
BY	DATE	ENGINEERING DIVISION CITY OF POMPANO BEACH	H-TEC AIR AND VACUUM VALVE	DATE: MAY 2022
		SCALE: N.T.S.		DWG. NO. 123-1

H-TEC AIR AND VACUUM VALVE MATERIALS OF CONSTRUCTION (123-2)

No.	Component	Series - Epoxy-coated steel
1	Outlet elbow w. screen/camlock 1,5"	Polyethylene (PE)
2	Diaphragm	Buna HNBR
3	Hex Head Bolt	Stainless Steel
4	Hexagon nut	Stainless Steel
5	Debris shield	Polyethylene (PE)
6	Body	Steel - epoxy powder coated
7	Float	Delrin®(POM)
8	Ball valve, 1"	Stainless Steel
9	Float spindle	Stainless Steel 316TI
10	Debris screen	Delrin®(POM)
11	Diaphragm holder	Delrin®(POM)
12	O-Ring 157 x 6 mm	Buna NBR
13	Clamping flange	Steel - epoxy powder coated
14	Upper air valve part	Delrin®(POM)
15	Valve spring	Stainless Steel
16	Damper ring	Buna NBR

Automatic Air and Vacuum Release Valve, steel - epoxy powder coated (Model # 986).

Automatic Air and Vacuum Valves shall be infinitely variable automatic air and vacuum valves designed to allow escape of air for a operating range starting from pressure range: 0.0 through 250 psi (0 - 17.2 bar), allow air to enter in the event of a vacuum, and soft working behavior as water hammer inhibition realized by roll-on diaphragm and spring mechanism. A debris shield made of PE allows no contact between fluid and sealing area. A secondary debris screen provides an additional protection for the diaphragm. The float shall be Delrin (Polyoximethylene, POM);the valve seat and all working parts shall be of corrosion-resistant materials.

Air and vacuum valves shall be, from H-TEC, Inc. (Hawle company)

PAINT BODY OF THE VALVE BLUE USING AN EXPOXY PAINT.

ENGINEERING STANDARDS 2022

REVISIONS				
BY	DATE	ENGINEERING DIVISION CITY OF POMPANO BEACH	H-TEC AIR AND VACUUM VALVE MATERIALS OF CONSTRUCTION	DATE: MAY 2022
		SCALE: N.T.S.		DWG. NO. 123-2

MIN. HORIZONTAL SEPARATION FOR POTABLE WATER (121-1)

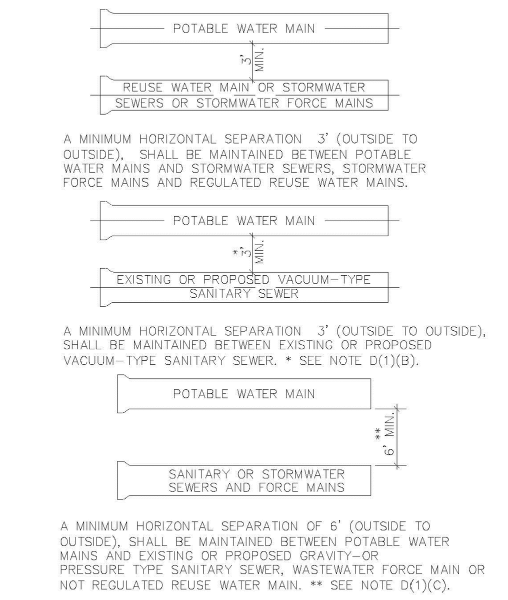

A MINIMUM HORIZONTAL SEPARATION 3' (OUTSIDE TO OUTSIDE), SHALL BE MAINTAINED BETWEEN POTABLE WATER MAINS AND STORMWATER SEWERS, STORMWATER FORCE MAINS AND REGULATED REUSE WATER MAINS.

A MINIMUM HORIZONTAL SEPARATION 3' (OUTSIDE TO OUTSIDE), SHALL BE MAINTAINED BETWEEN EXISTING OR PROPOSED VACUUM-TYPE SANITARY SEWER. * SEE NOTE D(1)(B).

A MINIMUM HORIZONTAL SEPARATION OF 6' (OUTSIDE TO OUTSIDE), SHALL BE MAINTAINED BETWEEN POTABLE WATER MAINS AND EXISTING OR PROPOSED GRAVITY-OR PRESSURE TYPE SANITARY SEWER, WASTEWATER FORCE MAIN OR NOT REGULATED REUSE WATER MAIN. ** SEE NOTE D(1)(C).

MINIMUM HORIZONTAL SEPARATION REQUIREMENTS FOR POTABLE WATER, REUSE, STORMWATER AND SEWER LINES

ENGINEERING STANDARDS 2022

REVISIONS				
BY	DATE	ENGINEERING DIVISION CITY OF POMPANO BEACH	MIN. HORIZONTAL SEPARATION FOR POTABLE WATER	DATE: JAN. 2022
S.S.	01/12	SCALE: N.T.S.		DWG. NO. 121-1

UTILITY CROSSINGS (122-1)

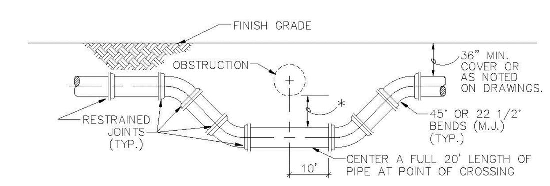

SPECIAL UTILITY CROSSING - FITTING TYPE

* 12" MINIMUM CLEARANCE REQUIRED FOR PRESSURE TYPE SANITARY SEWER, WASTEWATER OR STORMWATER FORCE MAIN OR REUSE WATER MAIN CROSSINGS. IF MINIMUM CLEARANCE CANNOT BE OBTAINED. REFER TO "PROTECTION OF POTABLE WATER SUPPLY" FOR WATER MAIN CROSSINGS. SEE NOTE 2(B), ON STANDARD NO. 122-3

6" MINIMUM CLEARANCE REQUIRED FOR WATER AND STORMWATER, SEWER MAIN CROSSINGS. SEE NOTE 2(A), ON STANDARD NO. 122-3.

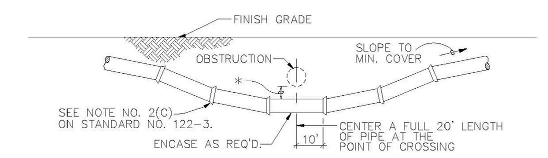

STANDARD UTILITY CROSSING - DEFLECTION TYPE

NOTES:
1. THE DEFLECTION TYPE CROSSING SHALL BE USED WHEREVER POSSIBLE. ONLY UNDER SPECIFIC ORDERS BY THE ENGINEER SHALL THE FITTING TYPE CROSSING BE ALLOWED.
2. CONSTRUCT STANDARD CROSSING USING NO MORE THAN 75% OF MANUFACTURERS' MAXIMUM JOINT DEFLECTION.
3. FOR POTABLE WATER MAINS, REFER TO "PROTECTION OF POTABLE WATER SUPPLY".

UTILITY CROSSINGS

ENGINEERING STANDARDS 2022

REVISIONS				
BY	DATE	ENGINEERING DIVISION CITY OF POMPANO BEACH	UTILITY CROSSINGS	DATE: JAN. 2022
S.S.	01/12	SCALE: N.T.S.		DWG. NO. 122-1

PROTECTION OF POTABLE WATER SUPPLY NOTES (122-2)

PROTECTION OF POTABLE WATER SUPPLY NOTES

A. GENERAL
IN ADDITION TO THESE REQUIREMENTS, ALL POTABLE WATER MAINS CONSTRUCTED IN THE VICINITY OF STORM SEWERS, SANITARY SEWERS OR FORCE MAINS SHALL COMPLY WITH THE APPLICABLE PROVISIONS OF FLORIDA ADMINISTRATIVE CODE CHAPTER 62-555, GREAT LAKES-UPPER MISSISSIPPI RIVER BOARD OF STATE SANITARY ENGINEERS (GLUMRB) "RECOMMENDED STANDARDS FOR WATER WORKS", AND GLUMRB "RECOMMENDED STANDARDS FOR WASTEWATER FACILITIES".

B. DEFINITIONS
FOR THE PURPOSES OF THIS SPECIFICATION, THE WORDS "OTHER PIPE" OR "OTHER PIPES" SHALL MEAN SANITARY SEWER MAIN, SEWAGE FORCE MAIN, STORMWATER MAIN OR ANY COMBINATION THEREOF.

C. CROSS CONNECTIONS PROHIBITED
THERE SHALL BE NO PHYSICAL CONNECTIONS BETWEEN A PUBLIC OR PRIVATE POTABLE WATER SUPPLY SYSTEM AND ANY OTHER PIPE OR APPURTENANCE THERETO WHICH WOULD PERMIT THE PASSAGE OF ANY WASTEWATER, POLLUTED WATER, OR ANY OTHER WATER INTO THE POTABLE SUPPLY. NO WATER PIPE SHALL PASS THROUGH OR COME INTO CONTACT WITH ANY PART OF A SANITARY SEWER MANHOLE OR STORMWATER MANHOLE.

D. RELATION OF OTHER PIPES TO POTABLE WATER MAINS

1. HORIZONTAL SEPARATION
A. NEW OR RELOCATED, UNDERGROUND WATER MAINS SHALL BE LAID TO PROVIDE A HORIZONTAL DISTANCE OF AT LEAST THREE FEET BETWEEN THE OUTSIDE OF THE WATER MAIN AND THE OUTSIDE OF ANY EXISTING OR PROPOSED STORM WATER, STORM WATER FORCE MAIN, OR PIPELINE CONVEYING REUSE WATER NOT REGULATED UNDER PART III OF CHAPTER 62-610,F.A.C.
B. NEW OR RELOCATED, UNDERGROUND WATER MAINS SHALL BE LAID TO PROVIDE A HORIZONTAL DISTANCE OF AT LEAST THREE FEET, AND PREFERABLY TEN FEET, BETWEEN THE OUTSIDE OF THE WATER MAIN AND THE OUTSIDE OF ANY EXISTING OR PROPOSED VACUUM-TYPE SANITARY SEWER.
C. NEW OR RELOCATED, UNDERGROUND WATER MAINS SHALL BE LAID TO PROVIDE A HORIZONTAL DISTANCE OF AT LEAST SIX FEET, AND PREFERABLY TEN FEET, BETWEEN THE OUTSIDE OF THE WATER MAIN AND THE OUTSIDE OF ANY EXISTING OR PROPOSED GRAVITY-OR PRESSURE-TYPE SANITARY SEWER, WASTEWATER FORCE MAIN, OR PIPELINE CONVEYING REUSE WATER NOT REGULATED UNDER CHAPTER 62-610, F.A.C. THE MINIMUM HORIZONTAL SEPARATION DISTANCE BETWEEN WATER MAINS AND GRAVITY TYPE SEWERS SHALL BE REDUCED TO THREE FEET WHERE THE BOTTOM OF THE WATER IS LAID AT LEAST SIX INCHES ABOVE THE TOP OF THE SEWER.

ENGINEERING STANDARDS 2022

REVISIONS				
BY	DATE	ENGINEERING DIVISION CITY OF POMPANO BEACH	POTABLE WATER SUPPLY NOTES	DATE: JAN. 2022
S.S.	01/12	SCALE: N.T.S.		DWG. NO. 122-2

PROTECTION OF POTABLE WATER SUPPLY NOTES (122-3)

D. NEW OR RELOCATED, UNDERGROUND WATER MAINS SHALL BE LAID TO PROVIDE A HORIZONTAL DISTANCE OF AT LEAST TEN FEET BETWEEN THE OUTSIDE OF THE WATER MAIN AND ALL PARTS OF ANY EXISTING OR PROPOSED "ON-SITE SEWAGE TREATMENT AND DISPOSAL SYSTEM".

2. VERTICAL SEPARATION
A. NEW OR RELOCATED, UNDERGROUND WATER MAINS CROSSING ANY EXISTING OR PROPOSED GRAVITY-OR VACUUM-TYPE SANITARY SEWER OR STORM SEWER SHALL BE LAID SO THE OUTSIDE OF THE WATER MAIN IS AT LEAST SIX INCHES, AND PREFERABLY 12 INCHES, ABOVE OR AT LEAST 12 INCHES BELOW THE OUTSIDE OF THE OTHER PIPELINE. HOWEVER, IT IS PREFERABLE TO LAY THE WATER MAIN ABOVE THE OTHER PIPELINE.
B. NEW OR RELOCATED, UNDERGROUND WATER MAINS CROSSING ANY EXISTING OR PROPOSED PRESSURE-TYPE SANITARY SEWER, WASTEWATER OR STORM WATER FORCE MAIN, OR PIPELINE CONVEYING REUSE WATER SHALL BE LAID SO THE OUTSIDE OF THE WATER MAIN IS AT LEAST 12 INCHES, ABOVE OR BELOW THE OUTSIDE THE OTHER PIPELINE. HOWEVER, IT IS PREFERABLE TO LAY THE WATER MAIN ABOVE THE OTHER PIPELINE.
C. AT THE UTILITY CROSSINGS DESCRIBED IN PARAGRAPHS (A) AND (B) ABOVE, ONE FULL LENGTH OF WATER MAIN PIPE SHALL BE CENTERED ABOVE OR BELOW THE OTHER PIPELINE SO THE WATER MAIN JOINTS WILL BE AS FAR AS POSSIBLE FROM THE OTHER PIPELINE. ALTERNATIVELY, AT SUCH CROSSINGS, THE PIPES SHALL BE ARRANGED SO THAT ALL WATER MAIN JOINTS ARE AT LEAST THREE FEET FROM ALL JOINTS IN VACUUM-TYPE SANITARY SEWERS, STORM SEWERS, STORM WATER FORCE MAINS, OR PIPELINES CONVEYING REUSE WATER REGULATED UNDER PART III OF CHAPTER 62-610, F.A.C. AND AT LEAST SIX FEET FROM ALL JOINTS IN GRAVITY- OR PRESSURE-TYPE SANITARY SEWERS, WASTEWATER FORCE MAINS, OR PIPELINES CONVEYING REUSE WATER NOT REGULATED UNDER PART III OR CHAPTER 62-610, F.A.C.

WHERE THE HORIZONTAL CAN BEING LOCATED LESS THAT THE REQUIRED MINIMUM DISTANCES FROM JOINTS IN THE OTHER PIPELINE OR THE HORIZONTAL IS LESS THAT THREE FEET FROM ANOTHER PIPELINE OR THE UNDER GROUND WATER MAIN IS CROSSING ANOTHER PIPELINE AND IS LESS THAN THE REQUIRED MINIMUM VERTICAL DISTANCE FROM THE OTHER PIPELINE, THE CONTRACTOR SHALL CONTACT THE ENGINEER IMMEDIATELY FOR RECOMMENDED SOLUTIONS TO MEET THE FLORIDA OF DEPARTMENT OF ENVIRONMENTAL PROTECTION REQUIREMENTS PER CHAPTER 62-555, F.A.C.

PROTECTION OF POTABLE WATER SUPPLY NOTES

ENGINEERING STANDARDS 2022

REVISIONS				
BY	DATE	ENGINEERING DIVISION CITY OF POMPANO BEACH	POTABLE WATER SUPPLY NOTES	DATE: JAN. 2022
S.S.	01/12	SCALE: N.T.S.		DWG. NO. 122-3

SERVICE LATERALS WITH RISERS (200-1)

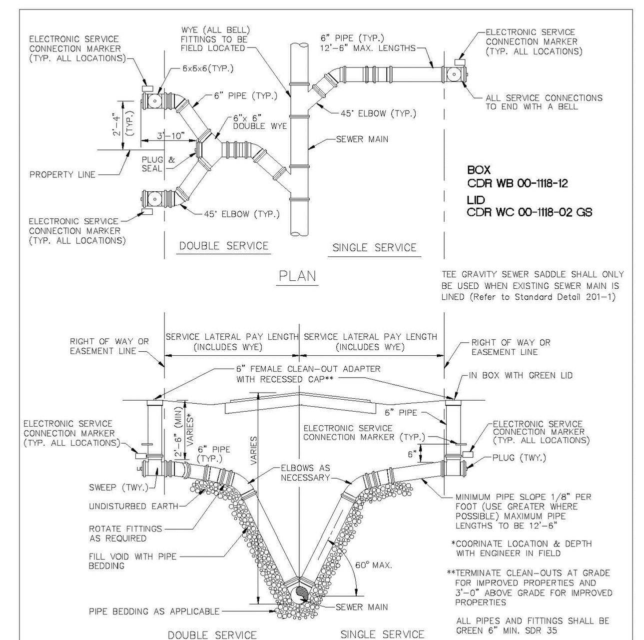

SERVICE LATERALS WITH RISERS

ENGINEERING STANDARDS 2022

REVISIONS				
BY	DATE	ENGINEERING DIVISION CITY OF POMPANO BEACH	SERVICE LATERALS	
T.W.	11-2007			
S.S.	01/27/12			DATE: JUNE 2022
S.S.	07/10/12			DWG. NO.
S.S.	02/05/16	SCALE: N.T.S.		200-1

SHALLOW SERVICE LATERALS (200-2)

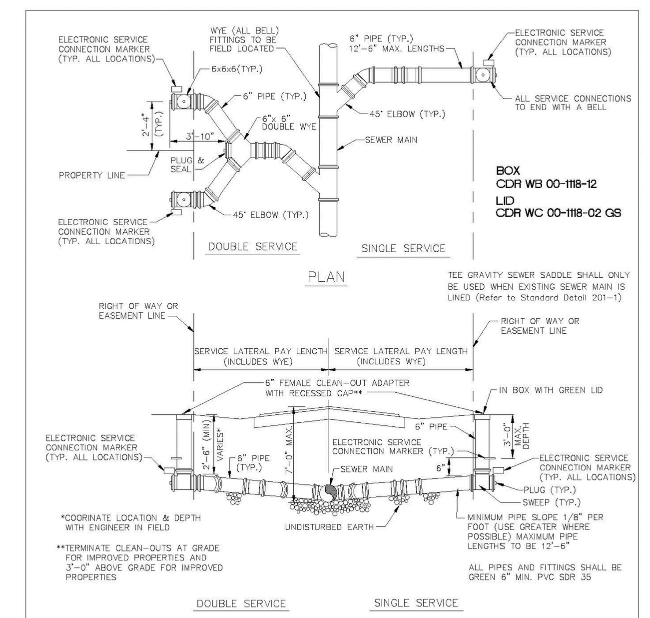

SHALLOW SERVICE LATERALS

ENGINEERING STANDARDS 2022

REVISIONS				
BY	DATE	ENGINEERING DIVISION CITY OF POMPANO BEACH	SERVICE LATERALS	
T.W.	11-2007			
S.S.	01/27/12			DATE: JUNE 2022
S.S.	07/10/12			DWG. NO.
S.S.	02/10/16	SCALE: N.T.S.		200-2

TEE GRAVITY SEWER SADDLE (201-1)

INLET: GASKETED BELL - SDR 35 PVC

Base Casting is ASTM A-48 Class 30 Cast Iron (Various Contours available to fit 6.275" - 30.00" O.D. Mains)
PVC Adapter is an ASTM D3034, SDR-35 Gasketed Bell
Adapter is cemented permanently in place with two-part urethane adhesive
Base of Saddle is dip-coated in a Waterbased Bituminous Coating
Strap is 24 ga. x 2.5" wide Type 304 Stainless Steel
Strap Pins are .75" dia. Type 303 Stainless Steel
T-Bolts are .375" - 16 Type 304 Stainless Steel
Nuts and Washers are Type 18-8 Stainless Steel
O-Ring is ASTM C-361-77 Tubular Polyisoprene
4" inlet requires a 4" dia. Tap in the Sewer Main
6" inlet requires a 6" dia. Tap in the Sewer Main (Sewer Main must be at least 8" dia.)
Note: This Dwg. supercedes Dwg. No. R-3408-D2

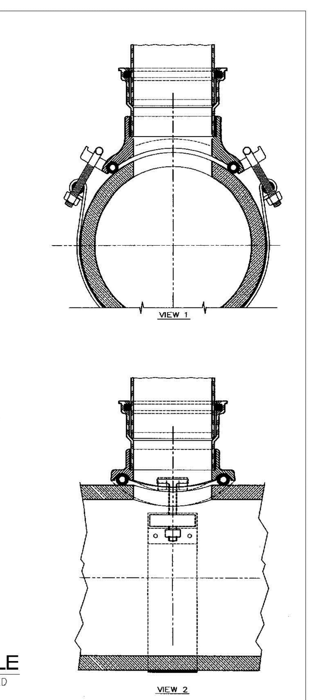

TEE GRAVITY SEWER SADDLE

TO BE USED WHEN A SEWER MAIN HAS BEEN LINED WITH A CURED IN PLACE MATERIAL.

ENGINEERING STANDARDS 2022

REVISIONS				
BY	DATE	ENGINEERING DIVISION CITY OF POMPANO BEACH	TEE GRAVITY SEWER SADDLE	DATE: MAY 2022
S.S.	11/23/16	SCALE: N.T.S.		DWG. NO. 201-1

WYE GRAVITY SEWER SADDLE (201-2)

INLET: GASKETED BELL - SDR-35 PVC

Base Casting is ASTM A-48 Class 30 Cast Iron (Various Contours available to fit 6.275" - 30.00" O.D. Mains)
PVC Adapter is an ASTM D3034, SDR-35 Gasketed Bell
Castings and Adapter cemented permanently in place with two-part urethane adhesive
Base of Saddle dip-coated in Waterbased Bituminous Coating
Strap is 24 ga. X 2.5" wide Type 304 Stainless Steel
Strap Pins are .75" dia. Type 303 Stainless Steel
T-Bolts are .375" - 16 Type 304 Stainless Steel
Nuts and Washers are Type 18-8 Stainless Steel
O-Ring is ASTM C-361-77 Tubular Polyisoprene
4" inlet requires a 4" x 6.50" oval tap in the Sewer Main
6" inlet requires a 6" x 9.25" oval tap in the Sewer Main (Sewer Main must be at least 8" dia.)
Note: This Dwg. supercedes Dwg. No. R-3157-D1

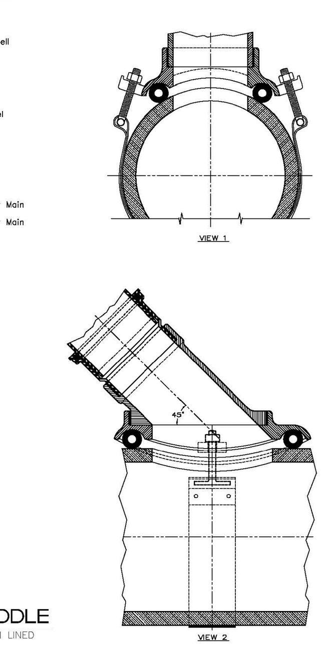

WYE GRAVITY SEWER SADDLE

TO BE USED WHEN A SEWER MAIN HAS BEEN LINED WITH A CURED IN PLACE MATERIAL.

ENGINEERING STANDARDS 2022

REVISIONS				
BY	DATE	ENGINEERING DIVISION CITY OF POMPANO BEACH	WYE GRAVITY SEWER SADDLE	DATE: MAY 2022
		SCALE: N.T.S.		DWG. NO. 201-2

ADJUSTABLE REPAIR COUPLING (202-1)

Adjustable Repair Coupling

NOTES

- Synthetic rubber gasket is strong, durable and resilient to ultraviolet rays, ozone, fungus growth and normal sewer gases. More pliable and easier to install in cold weather applications than an Elastomeric PVC gasket.
- Sealing "O" rings under the clamp prevent pipe slippage and create a more positive seal.
- More transition couplings for dissimilar pipe types and sizes are comprised of a one-piece transition gasket, eliminating the use of bushings that are difficult to install and easy to lose on the job site.
- Surgical Grade 316 stainless steel Nut & Bolt clamps are corrosion resistant, providing outstanding protection in severe environments such as marine applications, poorly aerated or moist soils, contaminated ground conditions (particularly industrial fill sites) and where the ground water contains chloride, sulfates or bicarbonates. Increased band tension of the Nut & Bolt clamp ensures a leak-proof, root-proof seal that is resistant to both infiltration and exfiltration.
- Series 300 stainless steel shear band is the heaviest in the industry, over 33% thicker than the competition.
- Broadest range of couplings on the market in sizes ranging from 1½" to 96" in diameter. Used for the alteration and rehabilitation of gravity-flow sewage pipes made of clay, cast iron, plastic, concrete, ductile iron, asbestos cement, fiber cement and truss pipe.

Specification:
Furnish and install stainless steel shielded sewer couplings, as manufactured by Mission Rubber Company. Coupling to meet ASTM C 1173. Gasket to meet ASTM C 425 Table 2, to be rubber and be environmentally certified. Series 300 stainless steel shear band with a minimum thickness of .012", surgical grade 316 stainless steel clamps with nut & bolt take up, shear ring and clamps to meet all requirements of ASTM A 240. All stainless steel parts and clamping mechanisms to be **manufactured in the U.S.A.** Transitional sizes to utilize a one piece gasket.

ADJUSTABLE REPAIR COUPLING PVC/CLAY NOTES

ENGINEERING STANDARDS 2022

REVISIONS				
BY	DATE	ENGINEERING DIVISION CITY OF POMPANO BEACH	ADJUSTABLE REPAIR COUPLING	DATE: MAY 2022
		SCALE: N.T.S.		DWG. NO. 202-1

TRENCH BACKFILL / BEDDING (203-1)

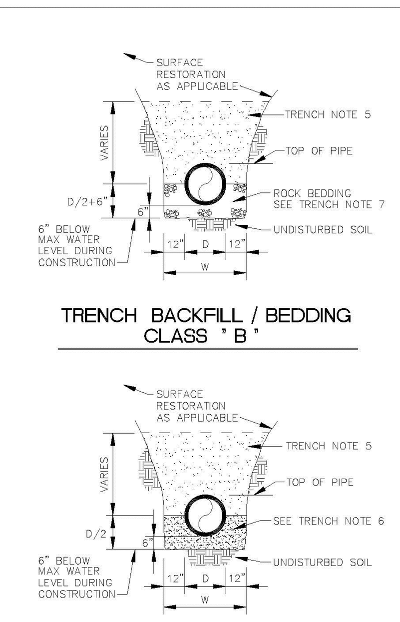

ENGINEERING STANDARDS 2022

REVISIONS				
BY	DATE	ENGINEERING DIVISION CITY OF POMPANO BEACH	TRENCH BACKFILL / BEDDING	DATE: JUNE 2022
S.S.	JUNE 2005	SCALE: N.T.S.		DWG. NO. 203-1

TRENCH BACKFILL / BEDDING (203-2)

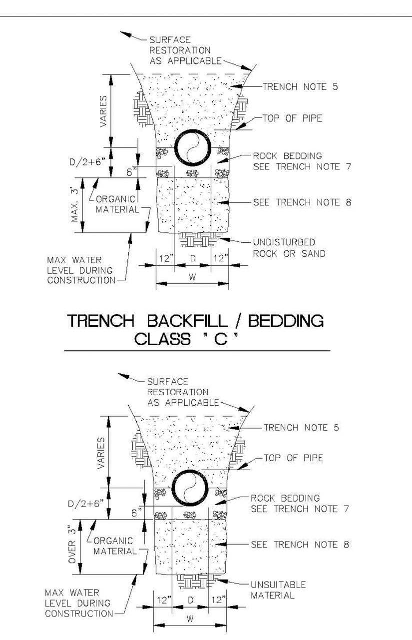

ENGINEERING STANDARDS 2022

REVISIONS				
BY	DATE	ENGINEERING DIVISION CITY OF POMPANO BEACH	TRENCH BACKFILL / BEDDING	DATE: JUNE 2022
S.S.	JUNE 2005	SCALE: N.T.S.		DWG. NO. 203-2

TRENCH BACKFILL / BEDDING NOTES (203-3)

1. OUTLINE OF TRENCH EXCAVATION IS FOR ILLUSTRATIVE PURPOSES ONLY. ACTUAL TRENCH WIDTH AND SHAPE WILL VARY WITH SOIL CONDITIONS. TRENCH EXCAVATION SHALL BE IN ACCORDANCE WITH THE "FLORIDA TRENCH SAFETY ACT" AND OSHA TRENCH SAFETY STANDARDS.
2. TYPICAL TRENCH BACKFILL/BEDDING FOR WATER MAIN AND FORCE MAIN INSTALLATIONS SHALL BE CLASS "A" AS SHOWN IN DETAIL.
3. TYPICAL TRENCH BACKFILL/BEDDING FOR GRAVITY SEWER INSTALLATION SHALL BE CLASS "B" AS SHOWN IN DETAIL.
4. TRENCH BACKFILL/BEDDING CLASS "C" AND CLASS "D" SHALL BE USED FOR PIPE INSTALLATIONS WHERE UNSITABLE TRENCH MATERIALS ARE ENCOUNTERED.
5. TRENCH ZONE BACKFILL SHALL BE MATERIAL TYPE 1 OR TYPES A THRU H, OR ANY MIXTURE THEREOF, WHERE SURFACE RESTORATION TYPE "1" IS APPLICABLE, TRENCH ZONE BACKFILL SHALL BE PLACED IN 12" LIFTS, COMPACTED TO 90% OF THE MATERIAL'S MAXIMUM DENSITY AS DETERMINED BY ASTM D-697 (AASHTO T-99). WHERE SURFACE RESTORATION TYPES "2", "3" AND "4" ARE APPLICABLE, TRENCH BACKFILL SHALL BE PLACED IN 8" LIFTS COMPACTED TO 98% OF THE MATERIAL'S DENSITY AS DETERMINED BY ASTM D-698 (AASHTO T-99).
6. BEDDING MATERIAL FOR TYPICAL WATER MAIN AND FORCE MAIN INSTAL-LATION SHALL BE TYPE C. BEDDING SHALL BE COMPACTED TO 95% OF THE MATERIAL'S MAXIMUM DENSITY AS DETERMINED BY ASTM D-1557 (AASHTO T-180).
7. BEDDING MATERIAL FOR TYPICAL GRAVITY SEWER INSTALLATION AND ANY INSTALLATION WHERE UNSUITABLE TRENCH BOTTOM CONDITIONS ARE FOUND SHALL BE TYPE E. BEDDING SHALL BE PLACED IN LIFTS NOT TO EXCEED 6" AND COMPACTED TO 95% OF THE MATERIAL'S MAXIMUM DENSITY AS DETERMINED BY ASTM D-1557 (AASHTO T-180).
8. UNSUITABLE MATERIAL SHALL BE REMOVED TO UNDISTURBED ROCK OR SAND OR TO DEPTH AS SPECIFIED BY ENGINEER. BACKFILL MATERIAL SHALL BE TYPE C. BACKFILL SHALL BE PLACED IN 8" LIFTS COMPACTED TO 95% OF THE MATERIAL'S MAXIMUM DENSITY AS DETERMINED BY ASTM D-1557 AASHTO T-180).

TRENCH BACKFILL / BEDDING NOTES

ENGINEERING STANDARDS 2022

REVISIONS				
BY	DATE	ENGINEERING DIVISION CITY OF POMPANO BEACH	TRENCH BACKFILL / BEDDING	DATE: JUNE 2022
		SCALE: N.T.S.		DWG. NO. 203-3

TRENCH BACKFILL / BEDDING NOTES (203-4)

9. BEDDING TYPES - THE FOLLOWING TYPES OF SUITABLE MATERIALS ARE DESIGNATED AND DEFINED AS FOLLOWING:

TYPE A: CRUSHED LIMEROCK OR SAND WITH 100 PERCENT PASSING A 1 INCH SIEVE AND A SAND EQUIVALENT VALUE NOT LESS THAN 50.

TYPE B: CRUSHED LIMEROCK OR SAND WITH 100 PERCENT PASSING A 1/2 INCH SIEVE AND A SAND EQUIVALENT VALUE NOT LESS THAN 50.

TYPE C: SAND WITH 100 PERCENT PASSING A 3/8 INCH SIEVE, AT LEAST 90 PERCENT PASSING A NUMBER 4 SIEVE, AND A SAND EQUIVALENT VALUE NOT LESS THAN 30.

TYPE D: CRUSHED LIMEROCK WITH 100 PERCENT PASSING A 1 INCH SIEVE AND NOT MORE THAN 10 PERCENT A NUMBER 4 SIEVE.

TYPE E: CRUSHED LIMEROCK OR SAND WITH 100 PERCENT PASSING A 3/4 INCH SIEVE AND NOT MORE THAN 10 PERCENT PASSING A NUMBER 4 SIEVE.

TYPE F: CRUSHED LIMEROCK MEETING THE FOLLOWING GRADATION REQUIRE-MENTS.

SIEVE SIZE	PERCENTAGE PASSING
2 INCH	100
1-1/2 INCH	90-100
1 INCH	20-55
3/4 INCH	0-15
NO. 200	0-3

TRENCH BACKFILL / BEDDING NOTES

ENGINEERING STANDARDS 2022

REVISIONS				
BY	DATE	ENGINEERING DIVISION CITY OF POMPANO BEACH	TRENCH BACKFILL / BEDDING	DATE: JUNE 2022
		SCALE: N.T.S.		DWG. NO. 203-4

REVISIONS:
1.
2.
3.
4.
5.
6.
7.
8.

CLIENT:
LLR ARCHITECTS, INC.
9000 SHERIDAN STREET
SUITE 158
PEMRBOKE PINES, FL, 33024

PROJECT:
REGANZANI TOWNHOMES
POMPANO BEACH FLORIDA

TASK:
CONSTRUCTION DETAILS

GGB Engineering
CIVIL AND FORENSIC ENGINEERS • LAND PLANNERS
•CONSTRUCTION MANAGERS
FLORIDA REGISTRATION No. 38256
2699 Stirling Road, Suite C-202
Fort Lauderdale, Florida 33312
Fax: (954) 986-6655
Phone: (954) 986-9899

DATE:	SCALE:
JUNE, 2025	N.T.S.
DESIGNED BY:	DRAWN BY:
B.J.R.	A.R.

PROJECT NO. 25-0386

SHEET C-005.2

BRIAN J. ROSE LICENSE No. 71549 STATE OF FLORIDA PROFESSIONAL ENGINEER

This document has been digitally signed and sealed by Brian J. Rose, P.E. on the date adjacent to the seal. Printed copies of this document are not considered signed and sealed and the signature must be verified on any electronic copies.

Brian Rose

DRC

PZ24-12000021

08/06/2025